ROTATING CONTROLS

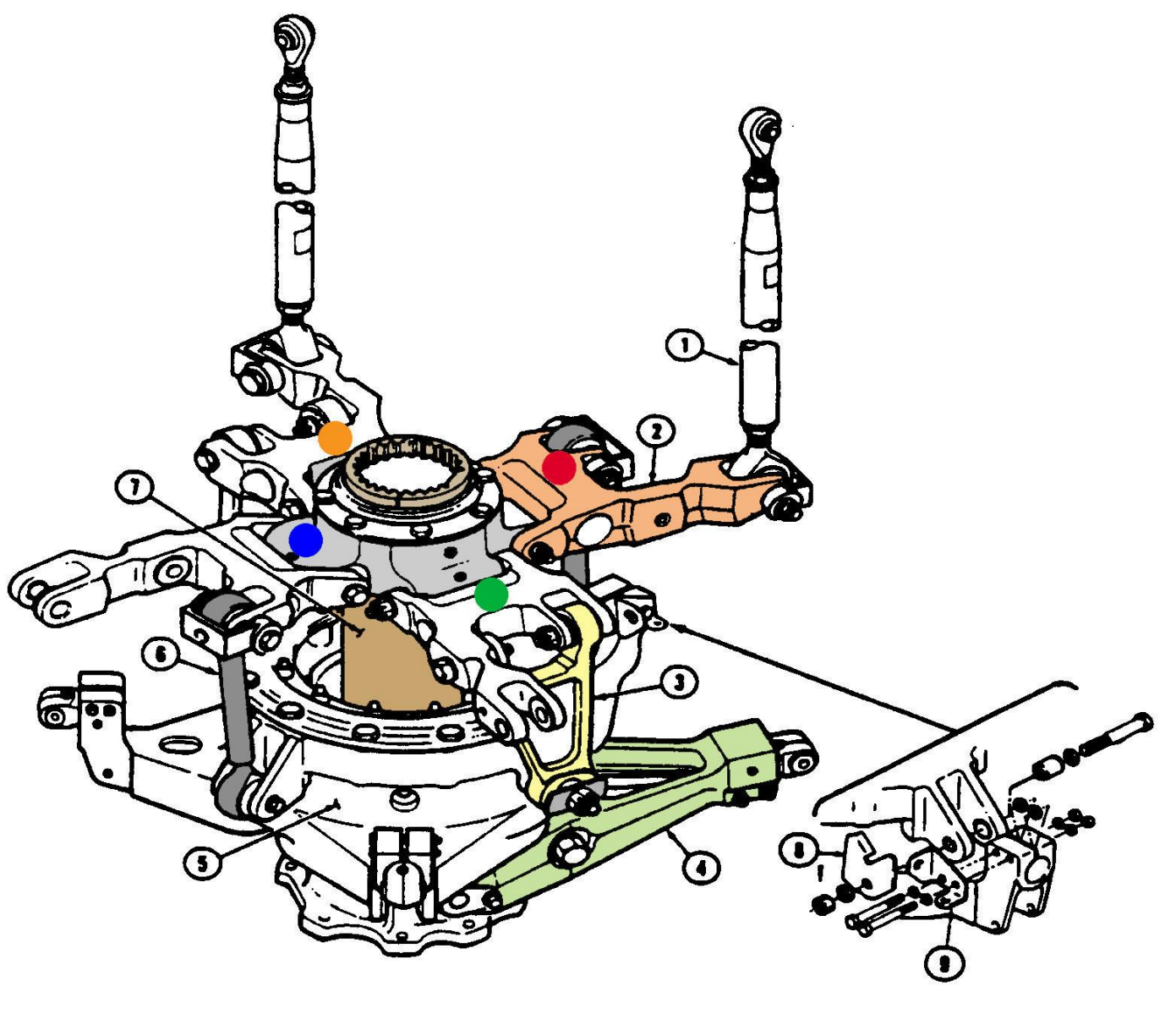

MAIN ROTOR CONTROLS

COLLECTIVE HUB AND SLEEVE

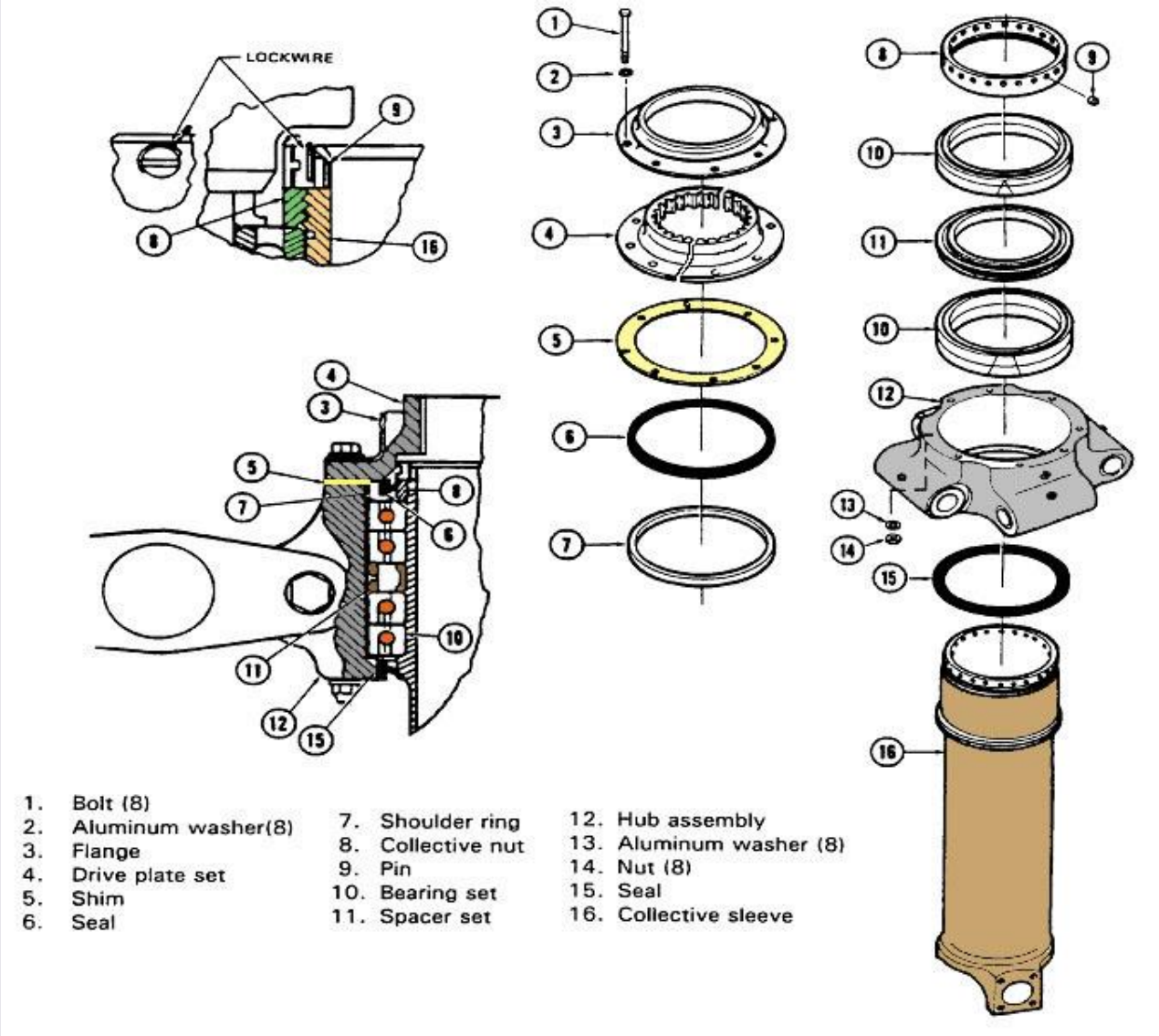

HUB BEARING

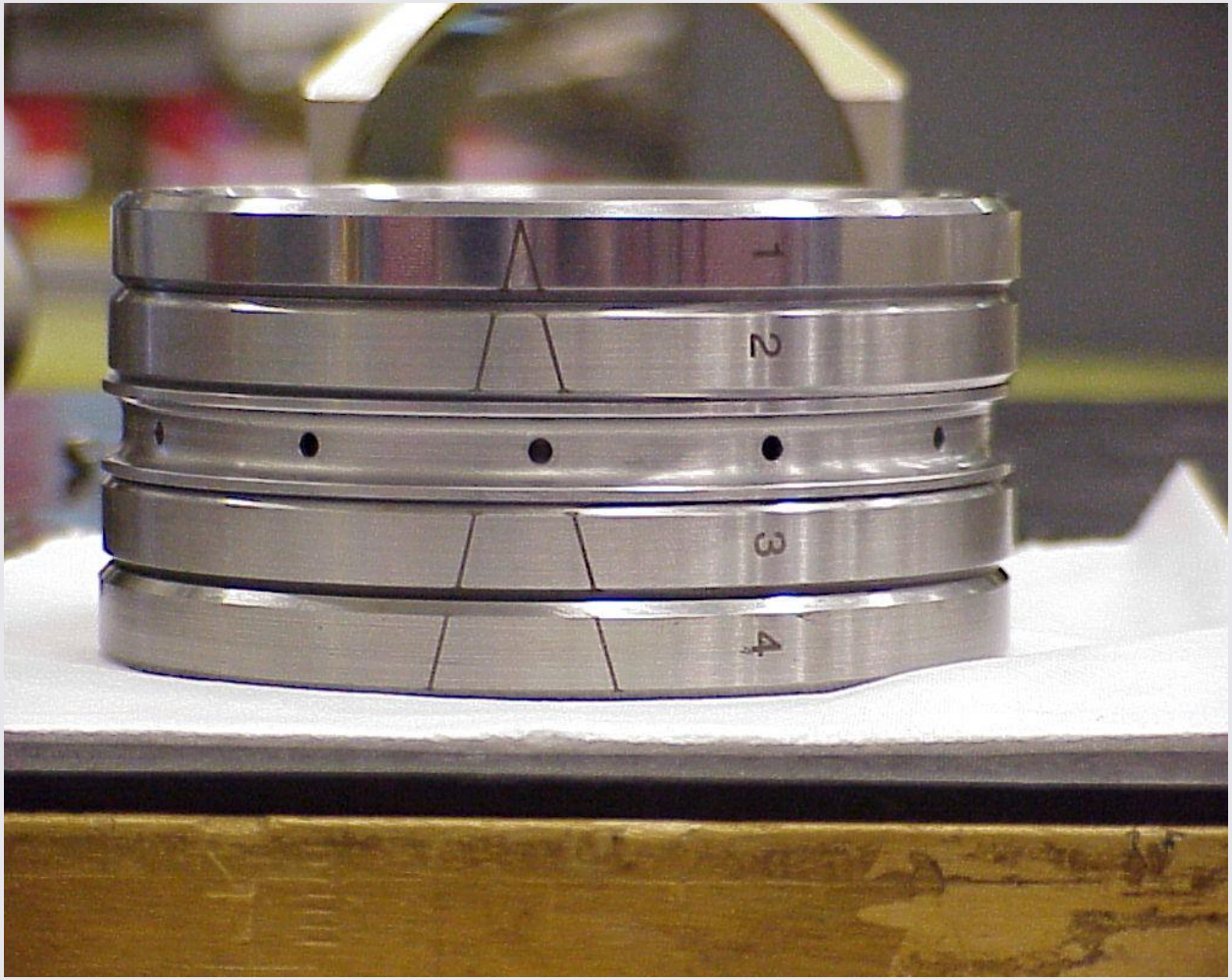

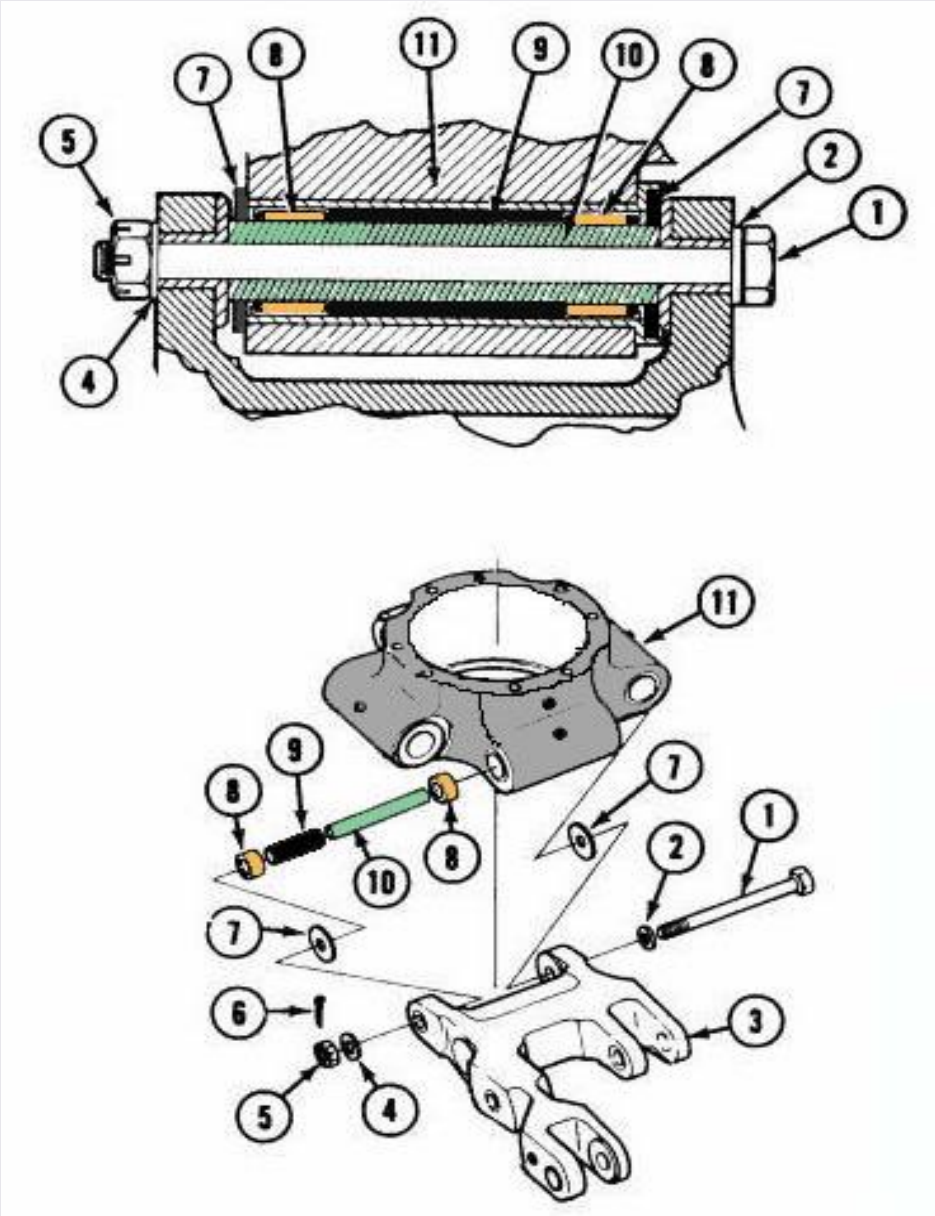

REPHASING LEVER CONNECTION

HUB ASSEMBLY

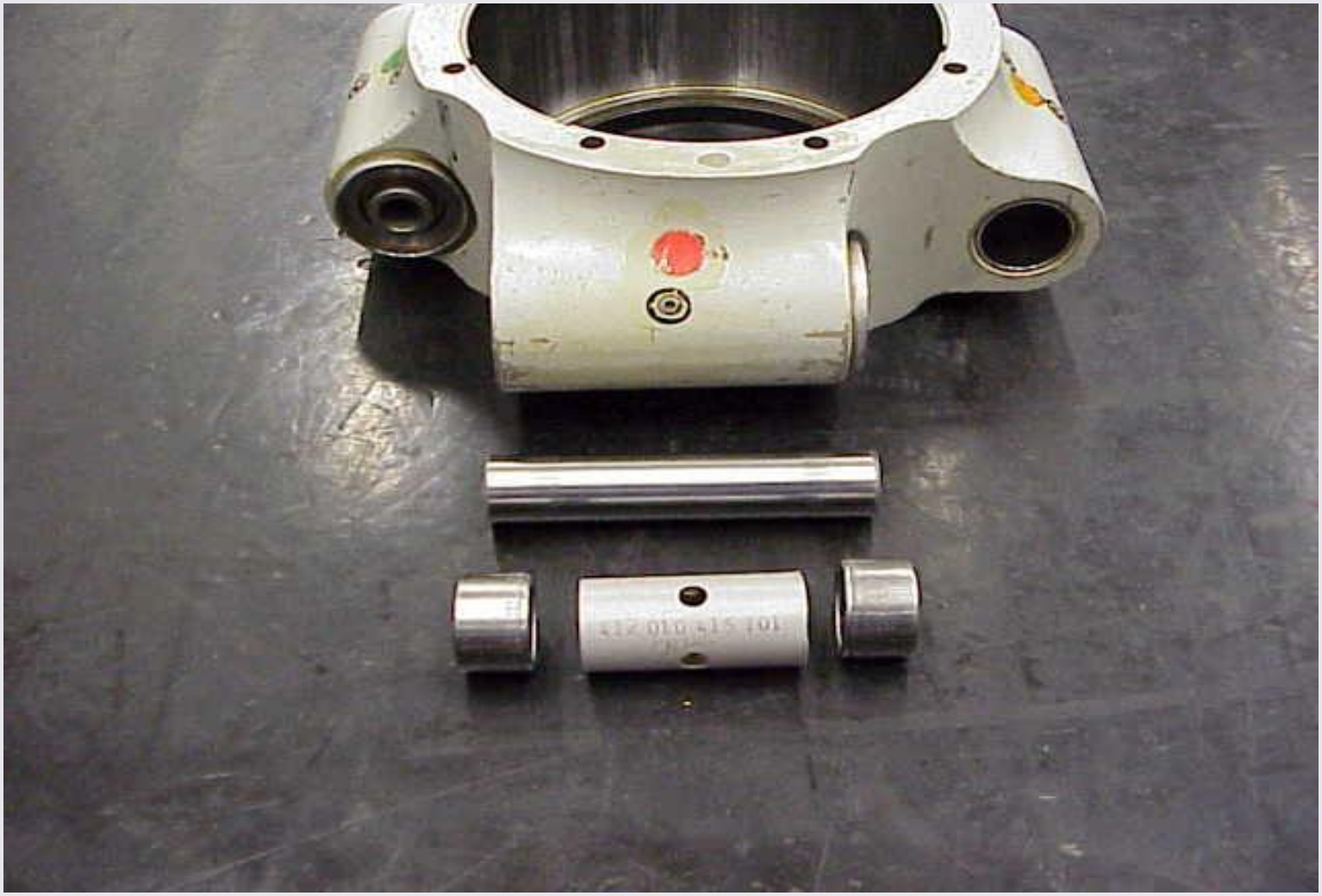

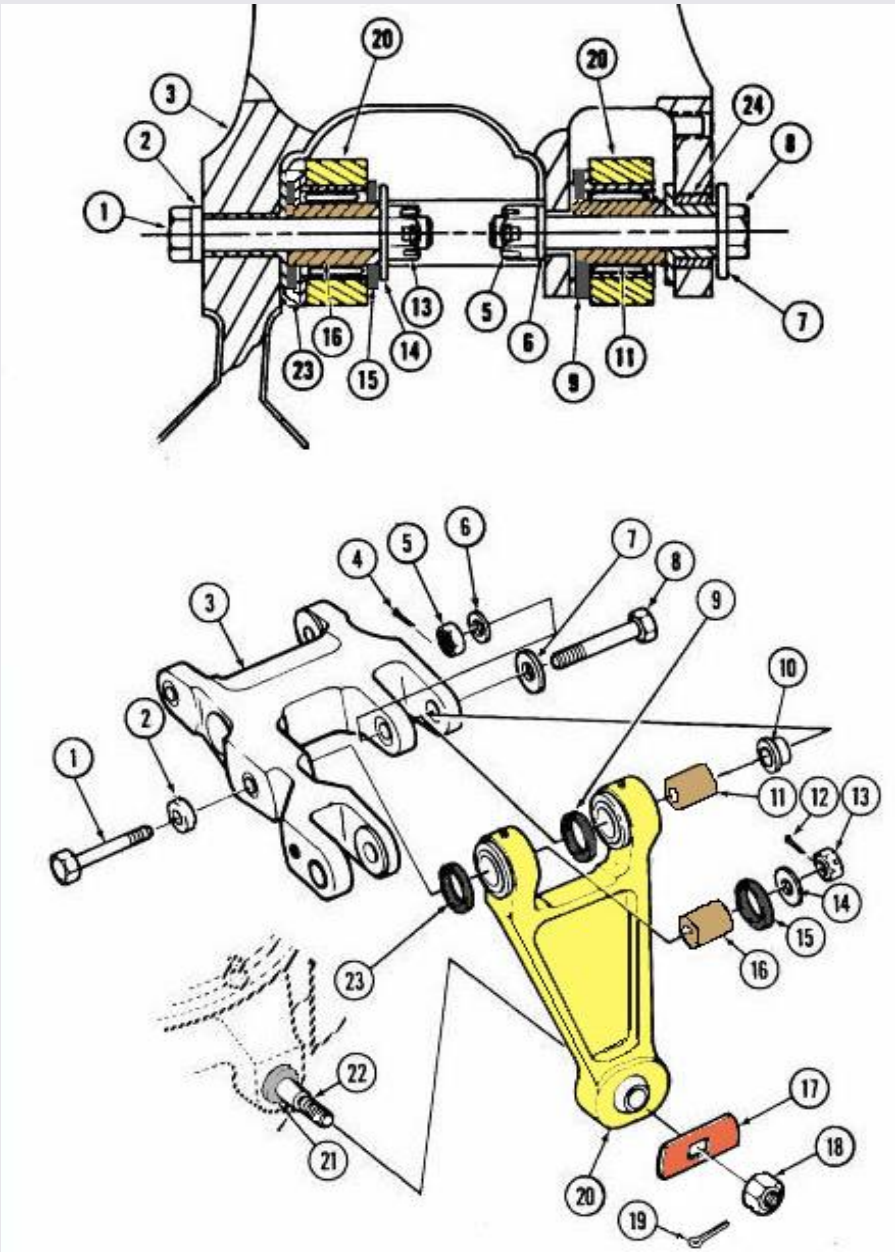

LEVER & LINK

TB412-03-189 ELIMINATION OF PREMATURE WEAR TO DRIVE LINK AND HUB

DRIVE LINK

LINK ASSEMBLY INSTALLATION

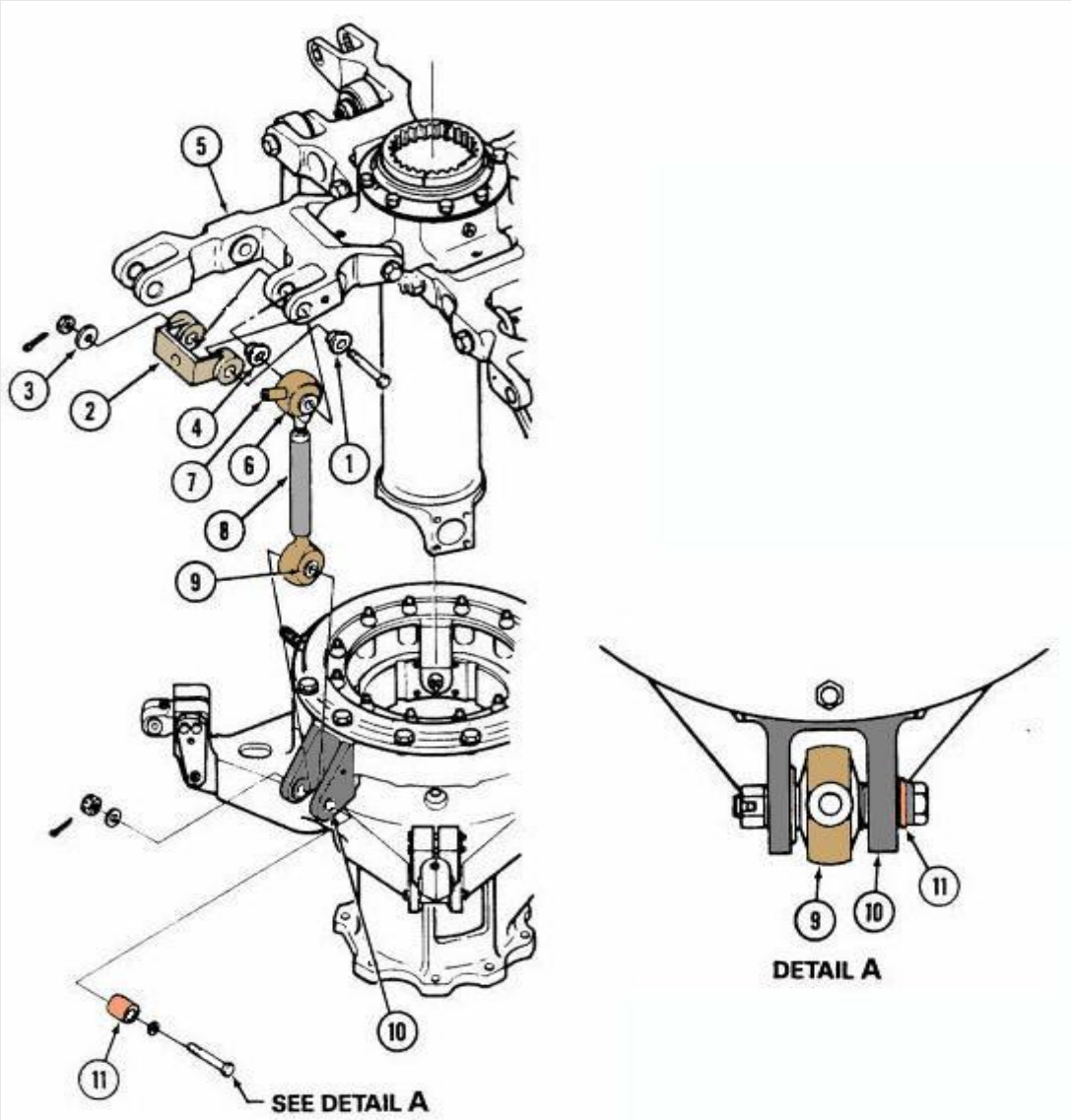

SWASHPLATE LINK

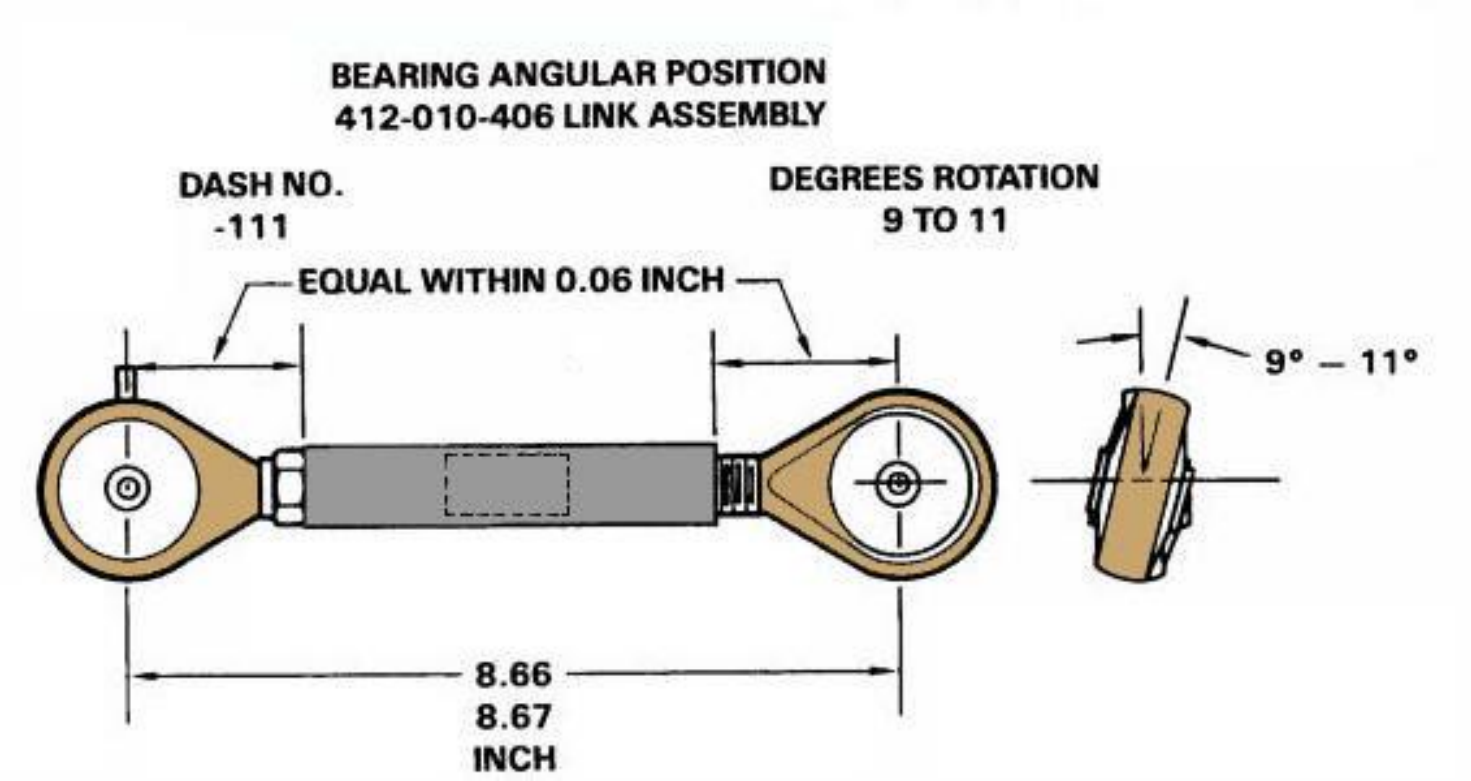

LINKAGE

INNER RING & SUPPORT

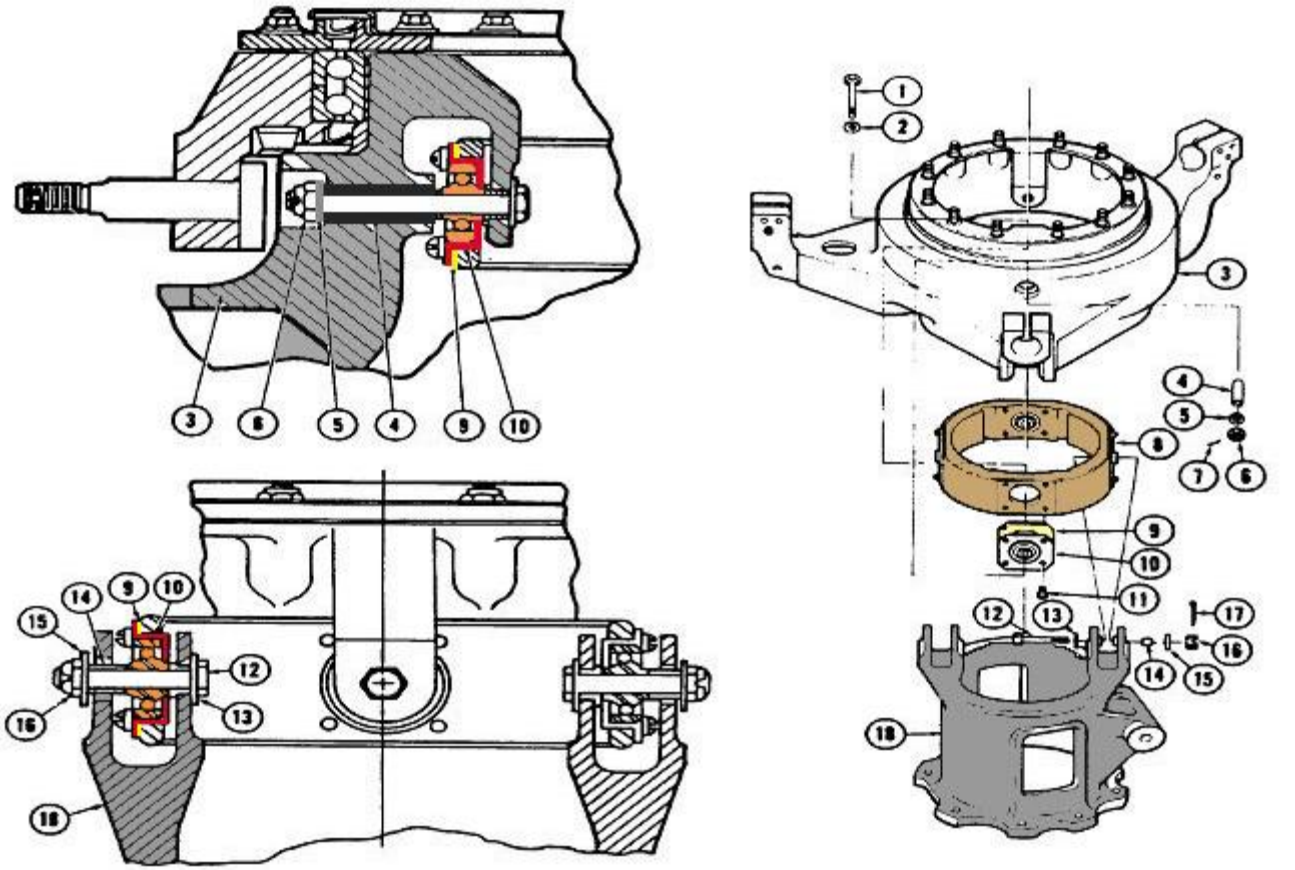

1. Bolt
2. Washer
3. Inner ring assembly
4. Bushing
5. Steel washer
6. Nut
7. Cotter pin
8. Gimbal ring
9. Shim
10. Bearing and liner
11. Screw (4)
12. Bolt
13. Washer
14. Bushing
15. Washer
16. Nut
17. Cotter pin
18. Support assembly

T/B 412-92-113 OUTER RING UPGRADE

DIS-ASSEMBLED VIEW

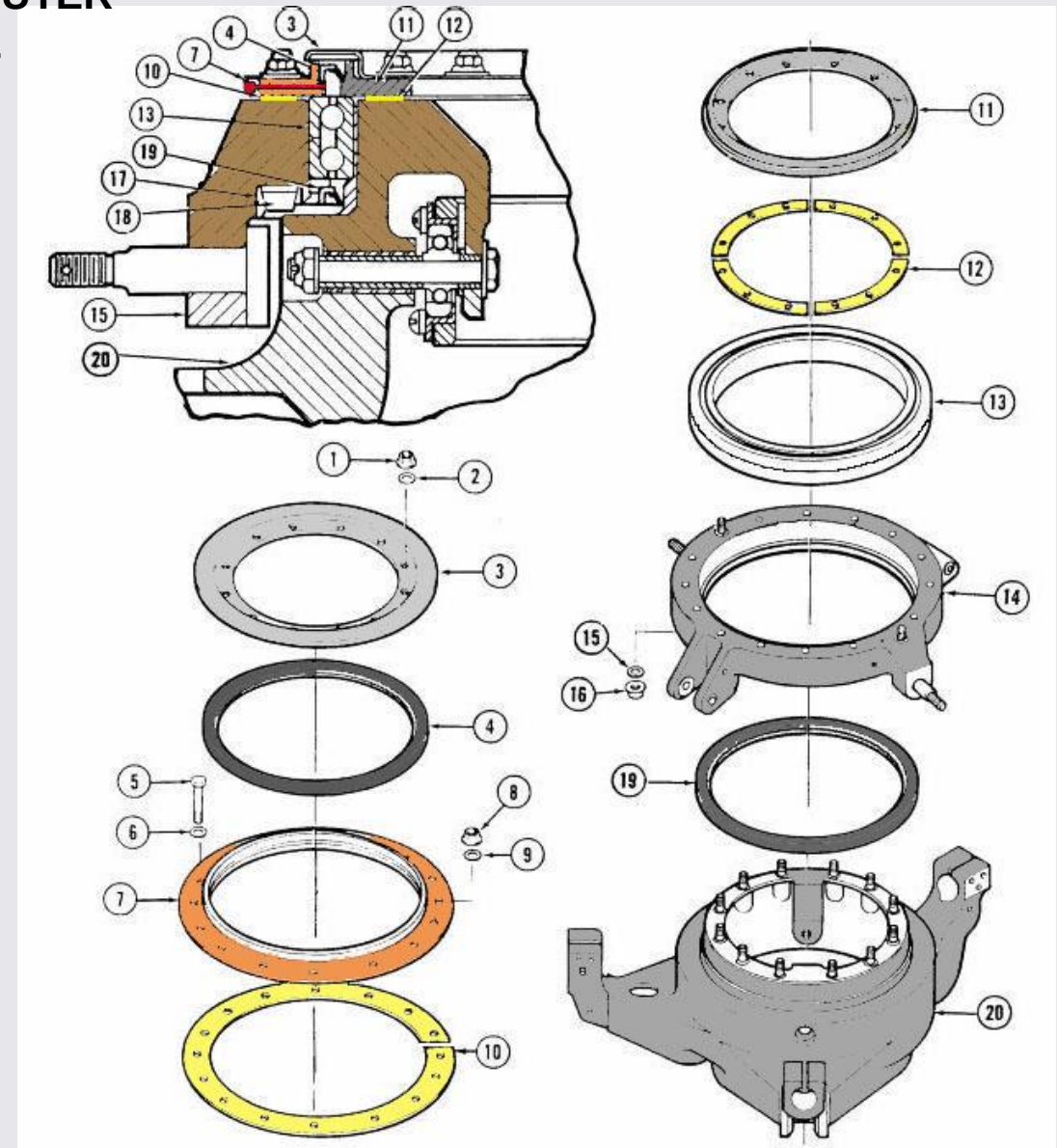

BEARING

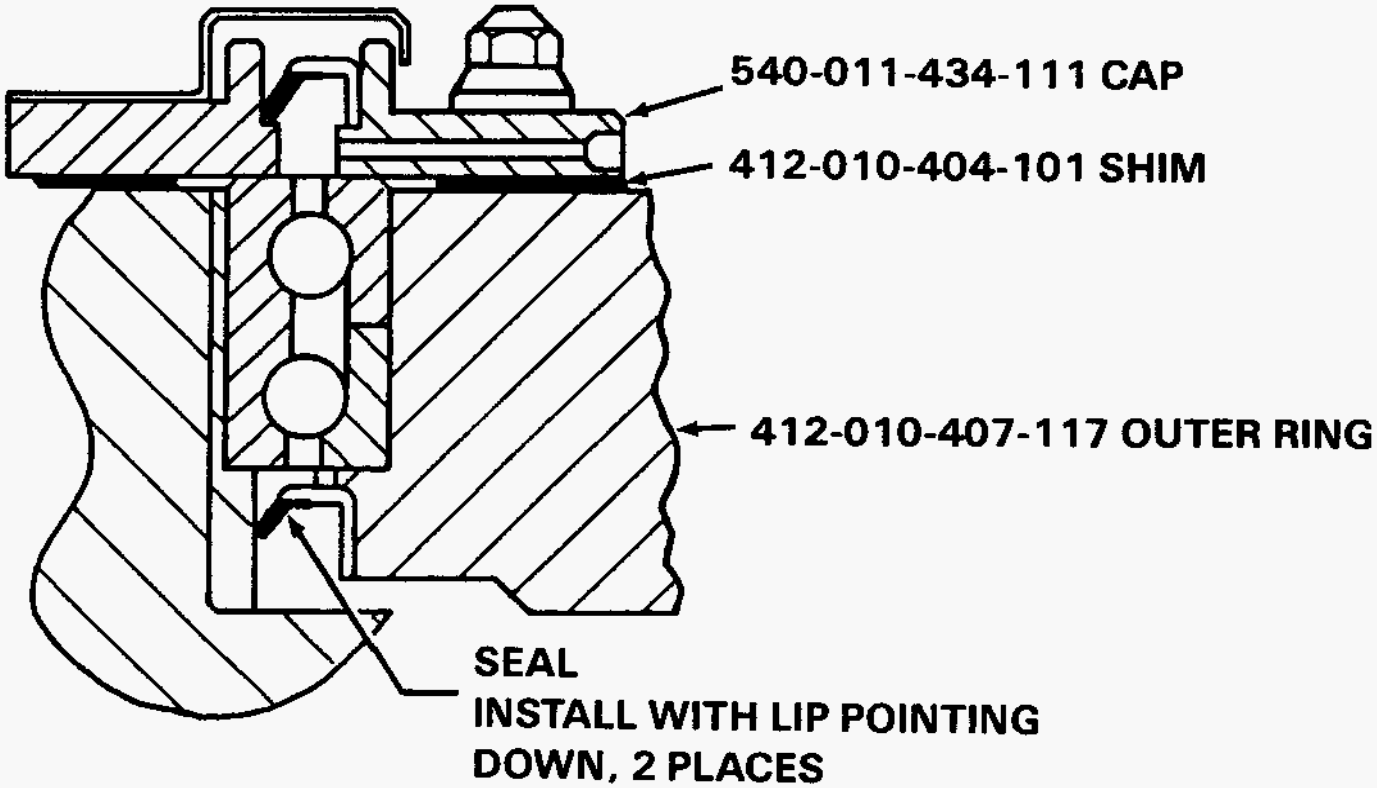
540-011-434-111 CAP
412-010-404-101 SHIM
412-010-407-117 OUTER RING
SEAL
INSTALL WITH LIP POINTING
DOWN, 2 PLACES

TRUNNION INSTALLATION

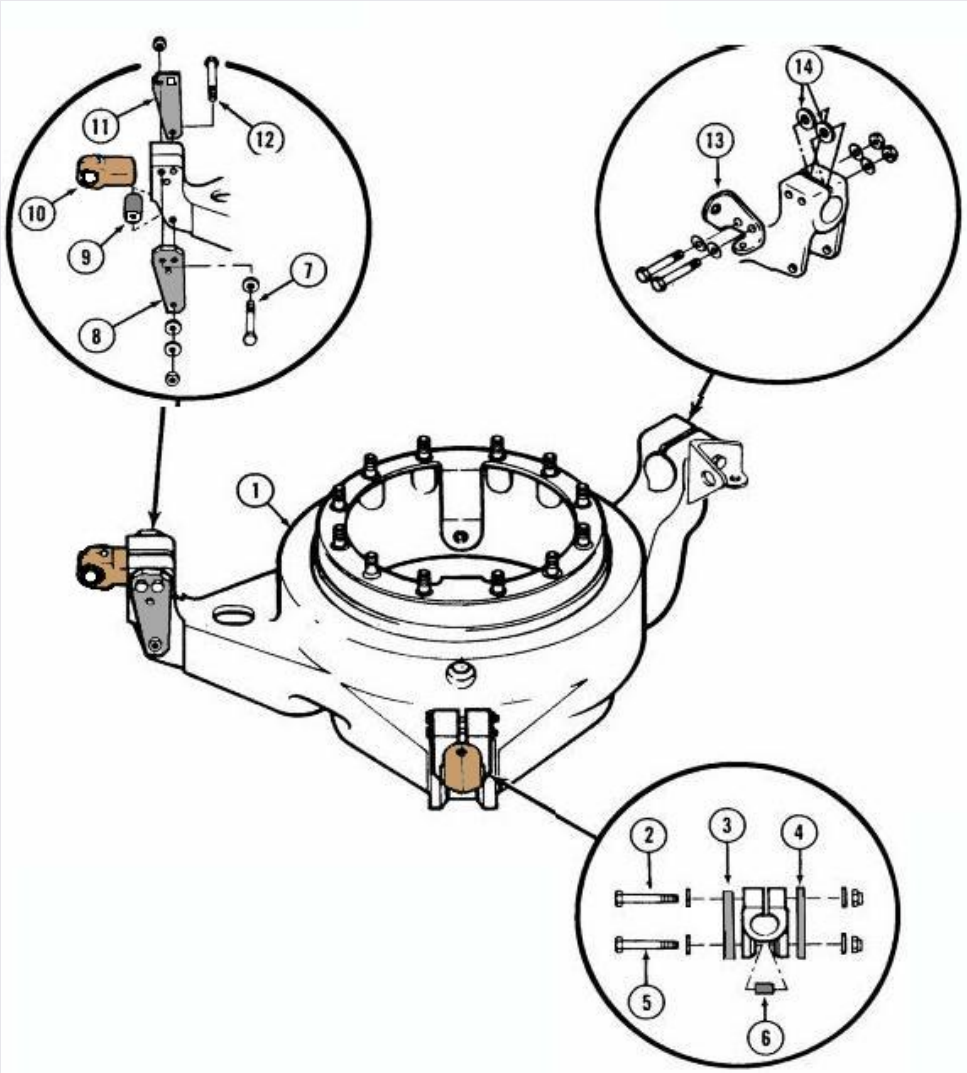

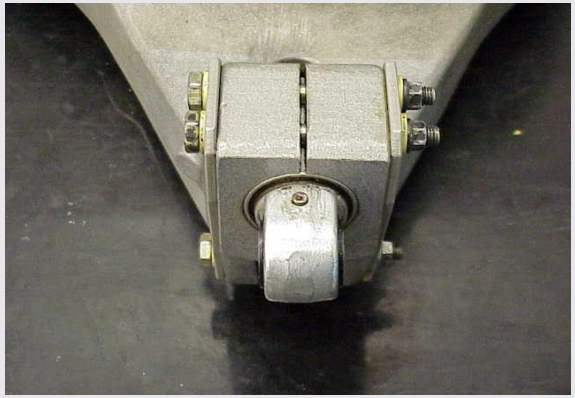

TRUNNION

THE TRUNNION BEARINGS ARE PRELOADED INTO THE CYLINDER PORTION OF THE TRUNNION WITH A 0.0005 INCH TIGHT TO 0.0005 INCH LOOSE TOLERANCE. THE FEELING OF ROUGHNESS IS DUE TO THE PRELOADED AND ANGULAR FACES OF THE INNER AND OUTER RACES.

MAXIMUM AXIAL PLAY IS 0.019 INCH

TRUNNION

SWASHPLATE & SLEEVE

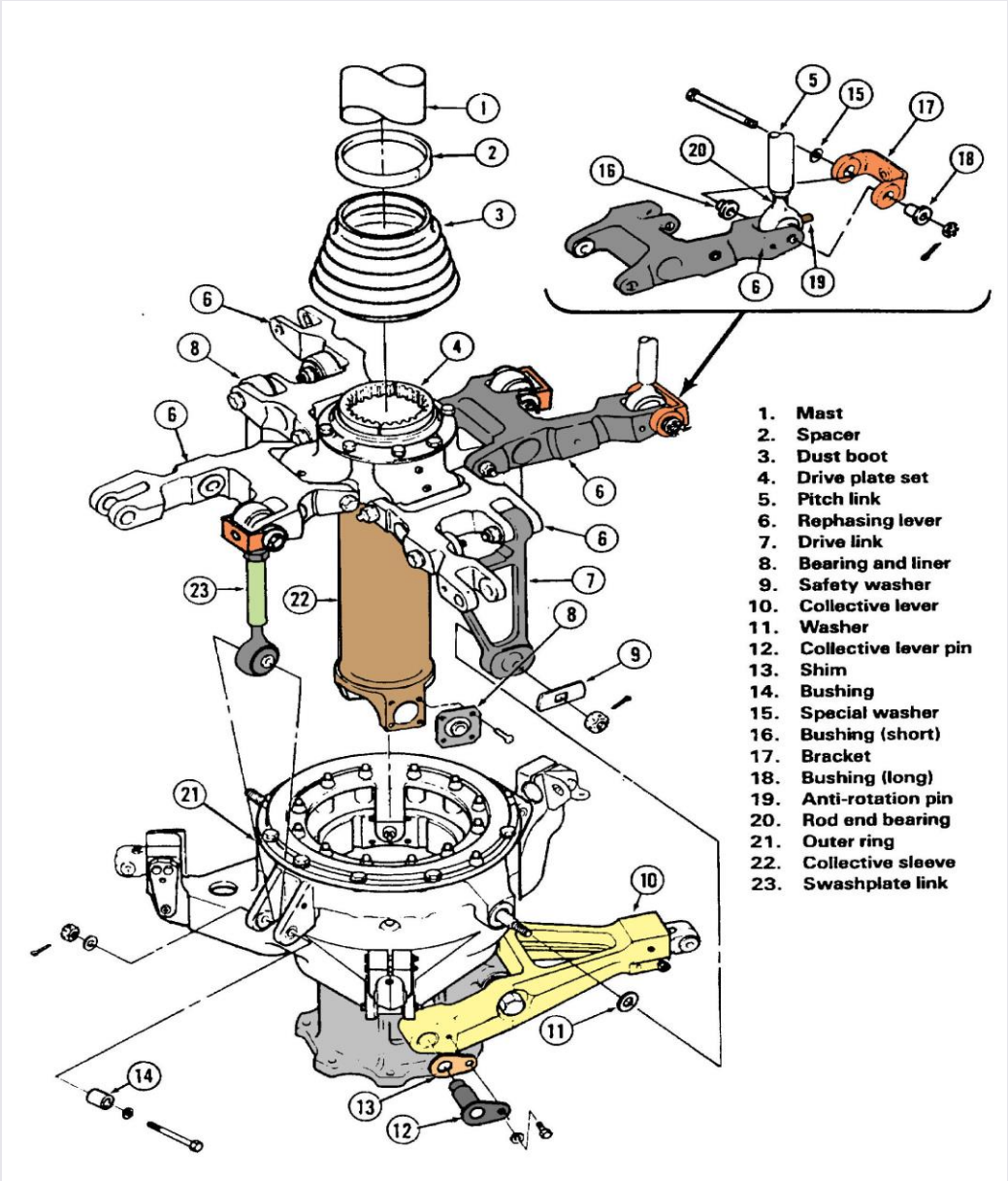

DRIVE PLATE SET WEAR CHECK

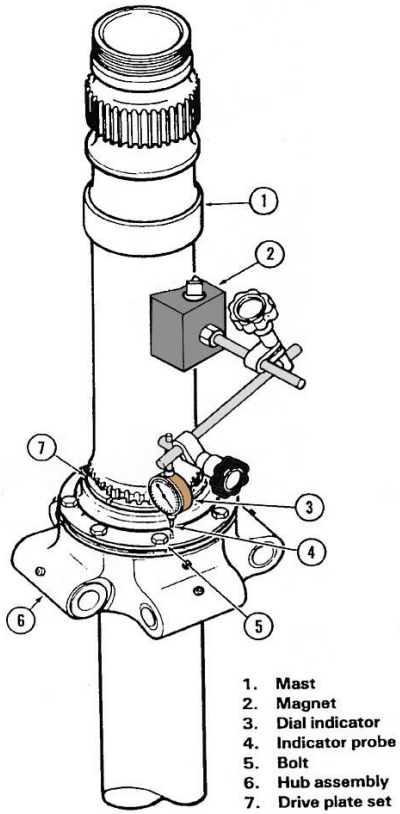

1. Mast
2. Magnet
3. Dial indicator
4. Indicator probe
5. Bolt
6. Hub assembly
7. Drive plate set

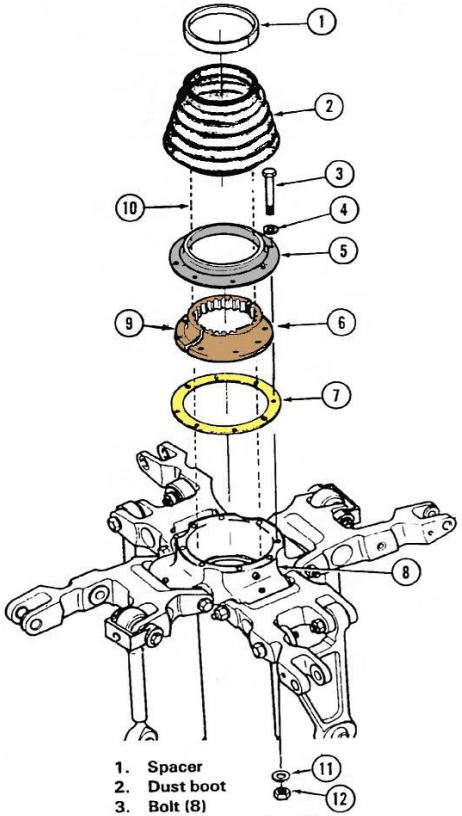

1. Spacer
2. Dust boot
3. Bolt (8)
4. Aluminum washer (8)
5. Dust boot flange
6. Plate set half
7. Shim
8. Hub
9. Plate set half
10. Mast
11. Aluminum washer (8)
12. Nut (8)

NOTES

Attach dial indicator (3) to mast (1) with magnet (2). Position indicator probe (4) in contact with a flat of bolt (5). Move hub (6) back and forth, in plane of rotation and measure amount of play.

Maximum acceptable rotational play allowed between mast and plate set drive is 0.040.

DRIVE PLATE & SHIM

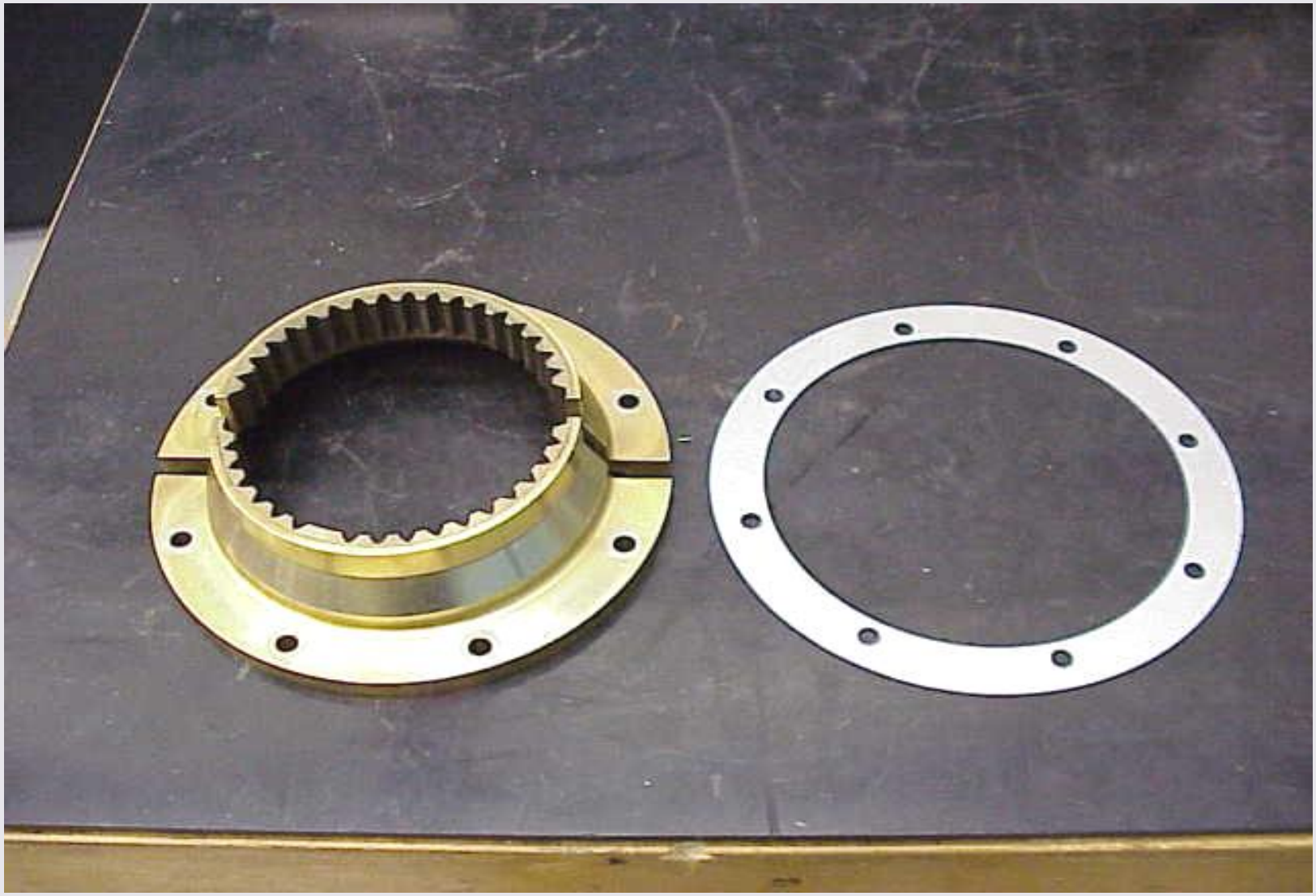

DRIVE PLATE POSITIONING

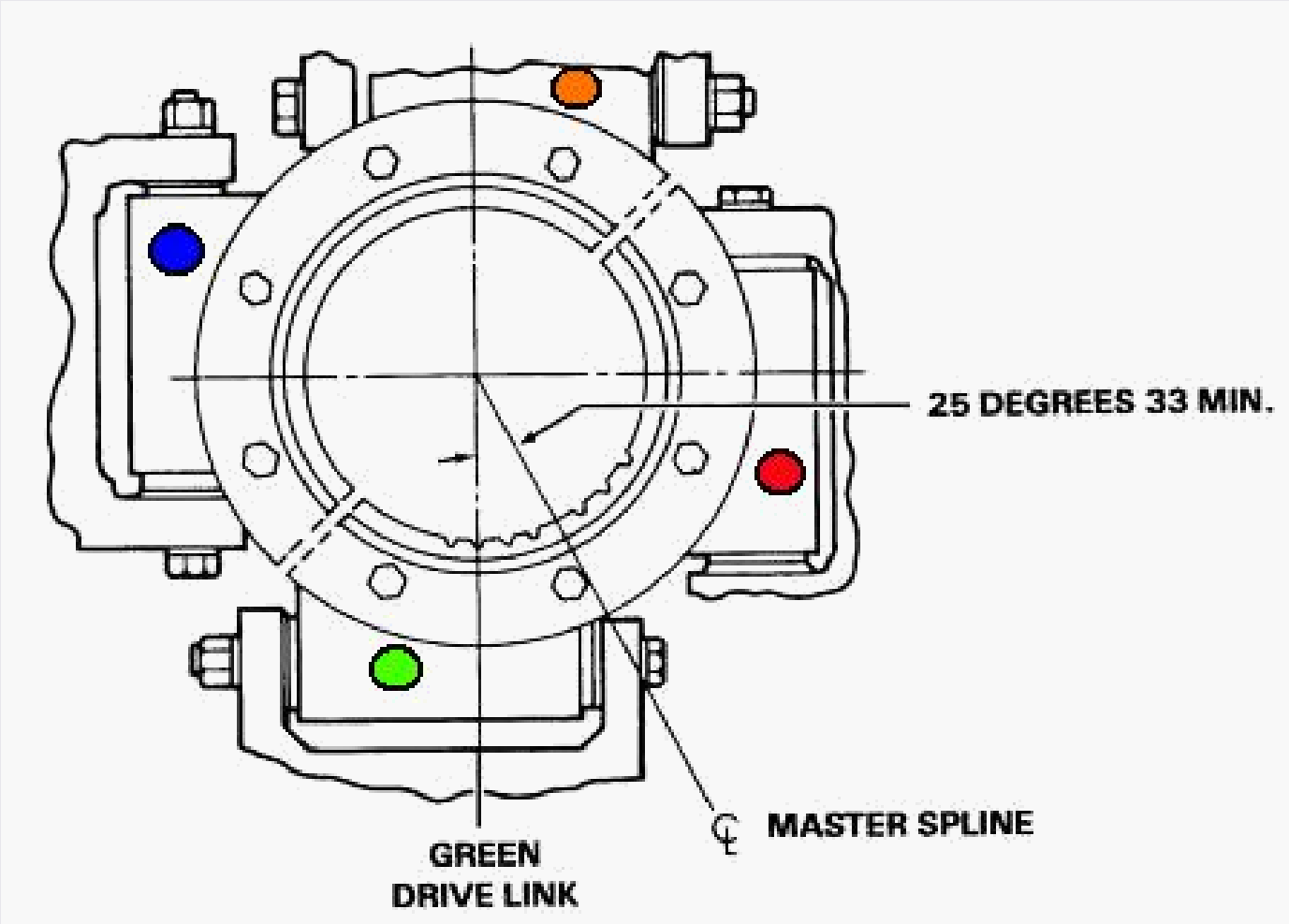

COLLECTIVE LEVER

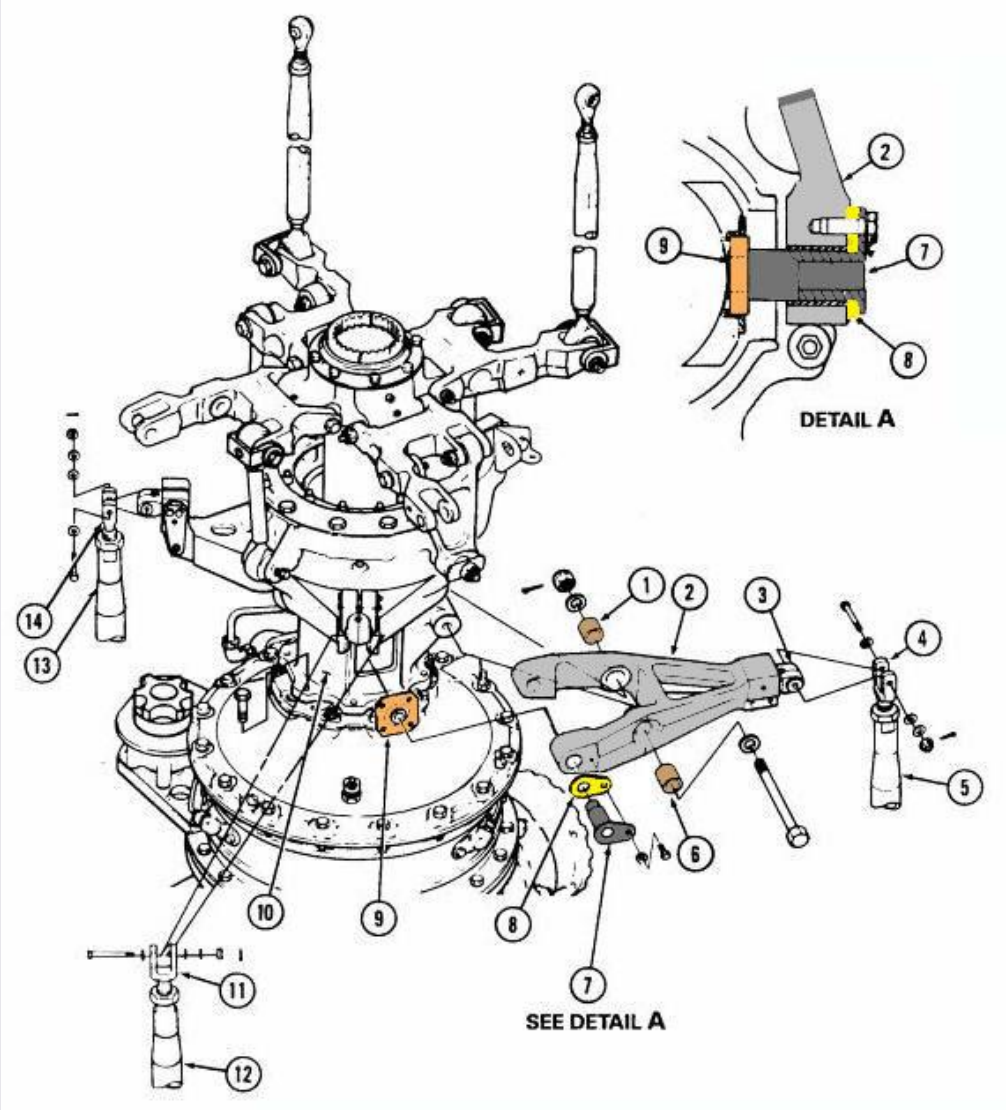

T/B 412-88-68 COLLECTIVE PIN UPGRADE

COLLECTIVE LEVER

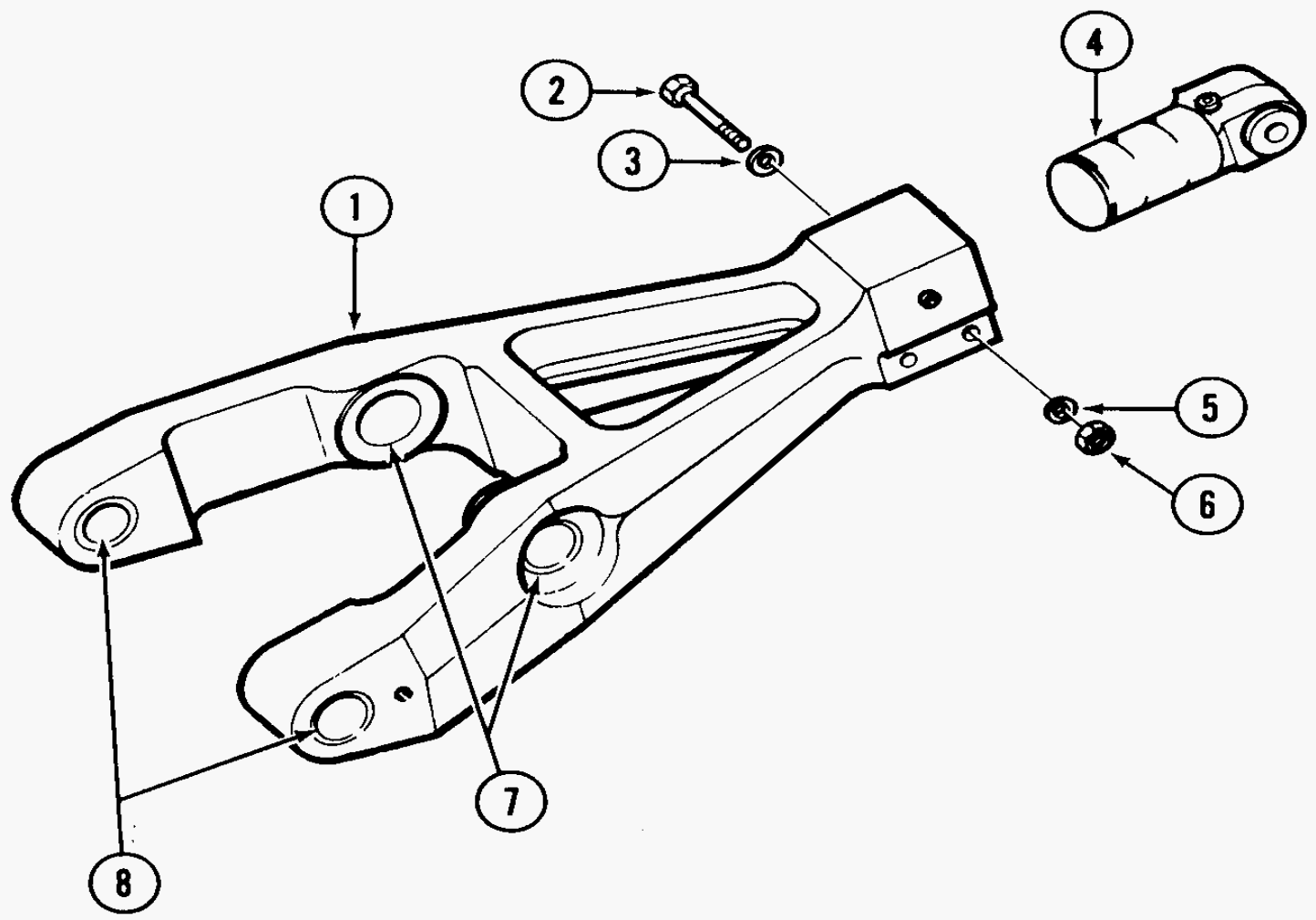

COLLECTIVE LEVER

412 REVIEW

1. The rotating controls serve the function of converting ___Non-rotating___ control movement to ___rotating___ control movement.

2. Raising the collective stick will cause the hub and sleeve to move ___down___ .

3. Moving the cyclic controls will cause two of the rephasing levers to move in ___opposite___ directions.

4. The rephasing levers main pivot point is at the hub connection with the application of ___cyclic___ control.

5. The collective sleeve ___Does___ ___not___ rotate with the rotor.

6. The nut securing the bearing inner races to the collective hub sleeve has ___left___ hand threads.

7. The splined drive plate set moves up and down the mast with the application of ___collective___ control.

8. The hub and sleeve assembly drive links are color coded ___Green___ and ___orange___ .

9. The two swashplate links are ___identical___.

10. The inner races of the two bearings in the drive link to rephasing lever connection ___Are___ ___not___ identical.

11. The drive links are driven by the rephasing levers and transmit ___cyclic___ control motion.

12. The swashplate ___outer___ ring rotates with the main rotor.

13. The inner ring has ___two___ trunnions.

412 REVIEW (cont.)

14. The swashplate thrust bearing has a split ___outer___ race.

15. The top of the mast boot is attached to the mast with a rubber spacer, and ___Safety wire___.

16. The hub drive plate is checked for a maximum of .040” ___rotational___ play.

17. The bearing on the swashplate to gimbal ring attach point are checked each 25 hour inspection for ___radial play___.

18. When correctly installed the swashplate 45° horns will be ___forward___ and the third horn will be aft.

19. The swashplate trunnions should be rotated during lubrication at each ___300___ hour inspection.